DENTIS
Multi-Unit Abutment

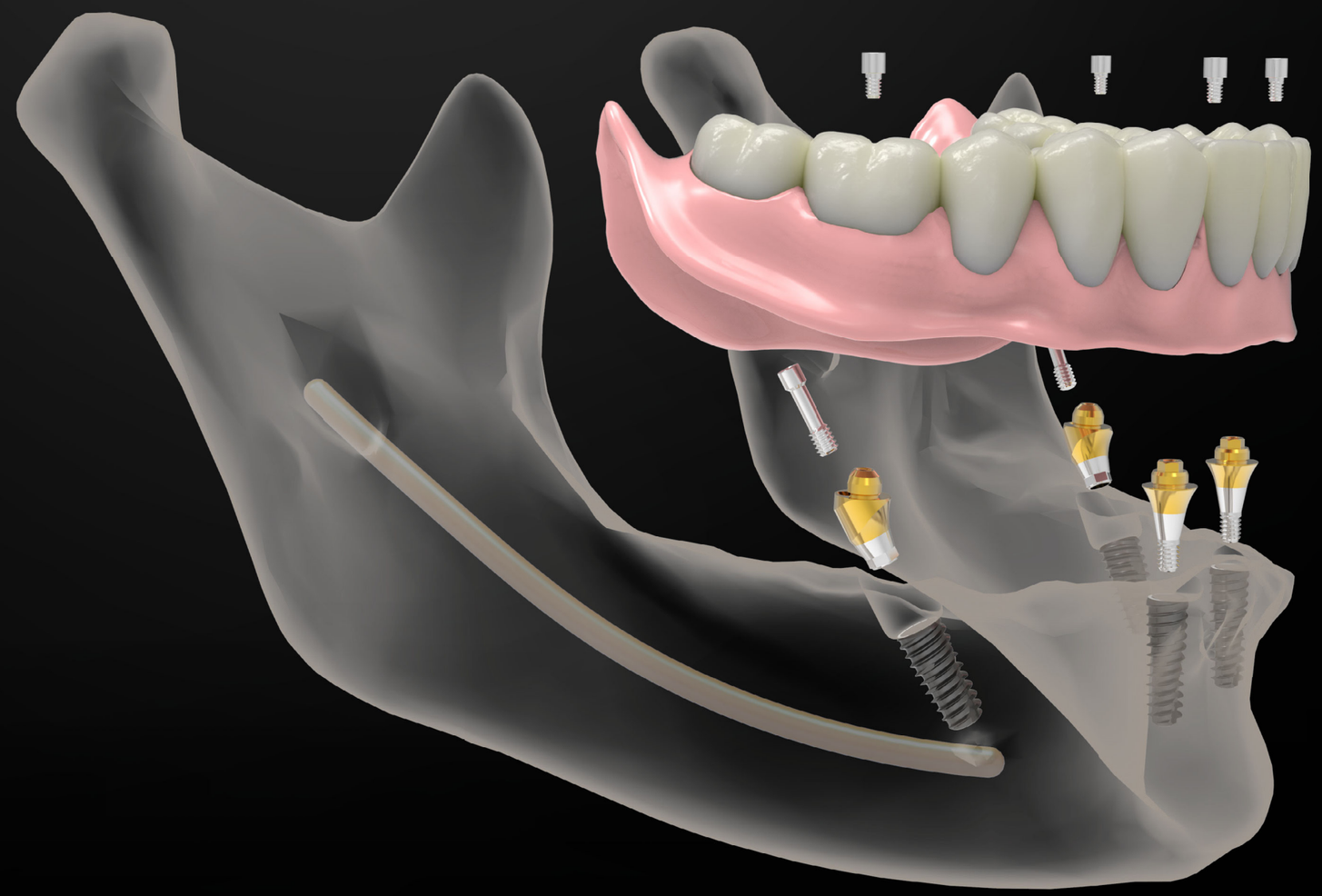

www.dentisimplant.co.kr

DENTIS

Tel. +82-1899-2804 I Fax. +82-53-583-2806
99, Seongseoseo-Ro, Dalseo-Gu, Daegu, Korea

Tel. +1-323-677-4363 I Fax. +1-323-677-4366
6 Centerpointe Drive, Suite 600 La Palma CA 90623

Tel. +021-5111-3828 I Fax. +021-5111-3828
上海市长宁区中山西路933号2205室

©2022 DENTIS Co.,Ltd.
All Right Reserved.
Specifications are subject to change without notice.
Trademarks are the property of DENTIS Co., Ltd. Or their respective owners.

D-C-MUA-V2-202204-ENG

Multi-Unit Abutment

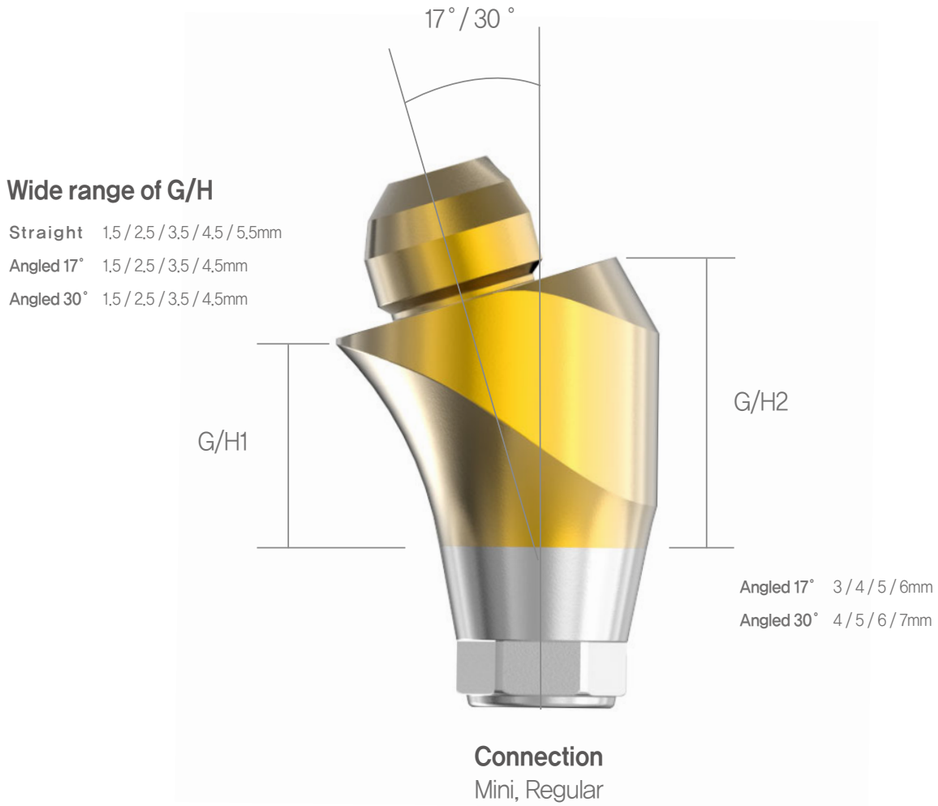

Composition of Scanbody and Digital Lab Analog

- Digital Work-Flow is available
- Exclusive Library (3shape / Exocad)

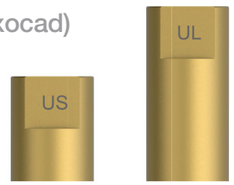

Scanbody

MU Digital Lab Analog

Prosthetic Flow Diagrams for MU Abutment System

Multi-Unit Abutment Line-Up

MU Straight Abutment Recommended Torque: 30Ncm

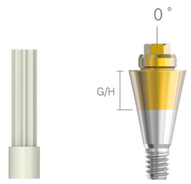

Mini

Diameter	Hex Size	Cuff	Code No.
Ø4.8	Sole Type	1.5	DSMUSM15S
		2.5	DSMUSM25S
		3.5	DSMUSM35S
		4.5	DSMUSM45S
		5.5	DSMUSM55S

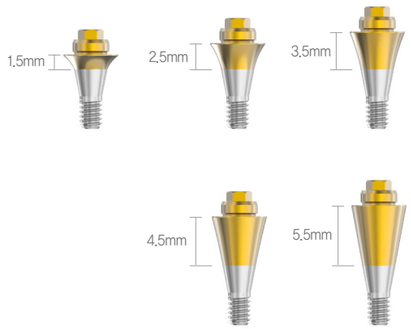

Regular

Diameter	Hex Size	Cuff	Code No.
Ø4.8	Sole Type	1.5	DSMUS15S
		2.5	DSMUS25S
		3.5	DSMUS35S
		4.5	DSMUS45S
		5.5	DSMUS55S

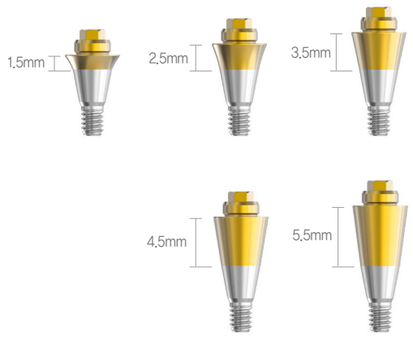

s-Clean MU Angled Abutment

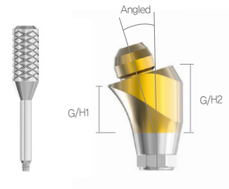

Mini Recommended Torque: 20Ncm

Diameter	Hex Size	Angled	G/H1	G/H2	Code No.
Ø4.8	Hex 2.1	17	1.5	3	DSMUAM1715S
			2.5	4	DSMUAM1725S
			3.5	5	DSMUAM1735S
			4.5	6	DSMUAM1745S
		30	1.5	4	DSMUAM3015S
			2.5	5	DSMUAM3025S
			3.5	6	DSMUAM3035S
			4.5	7	DSMUAM3045S

Screw Code : DSMUASM

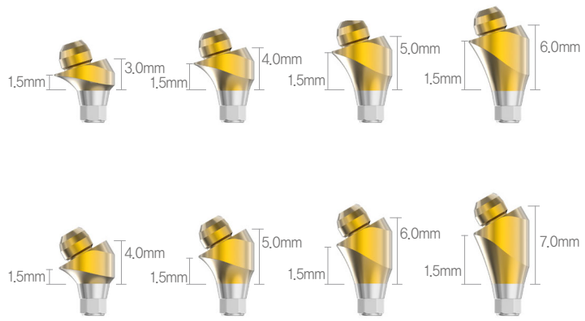

Regular Recommended Torque: 30Ncm

Diameter	Hex Size	Angled	G/H1	G/H2	Code No.
Ø4.8	Hex 2.5	17	1.5	3	DSMUA1715S
			2.5	4	DSMUA1725S
			3.5	5	DSMUA1735S
			4.5	6	DSMUA1745S
		30	1.5	4	DSMUA3015S
			2.5	5	DSMUA3025S
			3.5	6	DSMUA3035S
			4.5	7	DSMUA3045S

Screw Code : DSMUAS

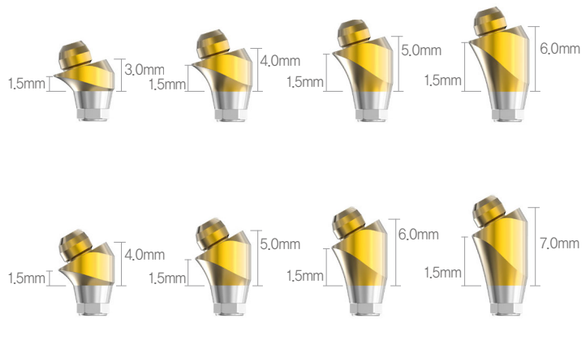

Multi-Unit Abutment

DENTIS Multi Unit Abutment is designed for fixed and screw–retained restoration of partially and completely edentulous arches, including the All–on–4 treatment. The system consists of straight and angled (17° and 30°) abutments with a diverse choice of gingiva heights to match the thickness of the soft tissue and depth of implant placement.

By placing four fixtures in the patient's mouth, a hybrid denture which is the most similar oral condition with natural teeth. The most c ost–effective treatment is available with Multi Unit Abutments.

In general, two of the MU straight abutments for anterior and two of the MU angled type abutments for posterior positions are connected.

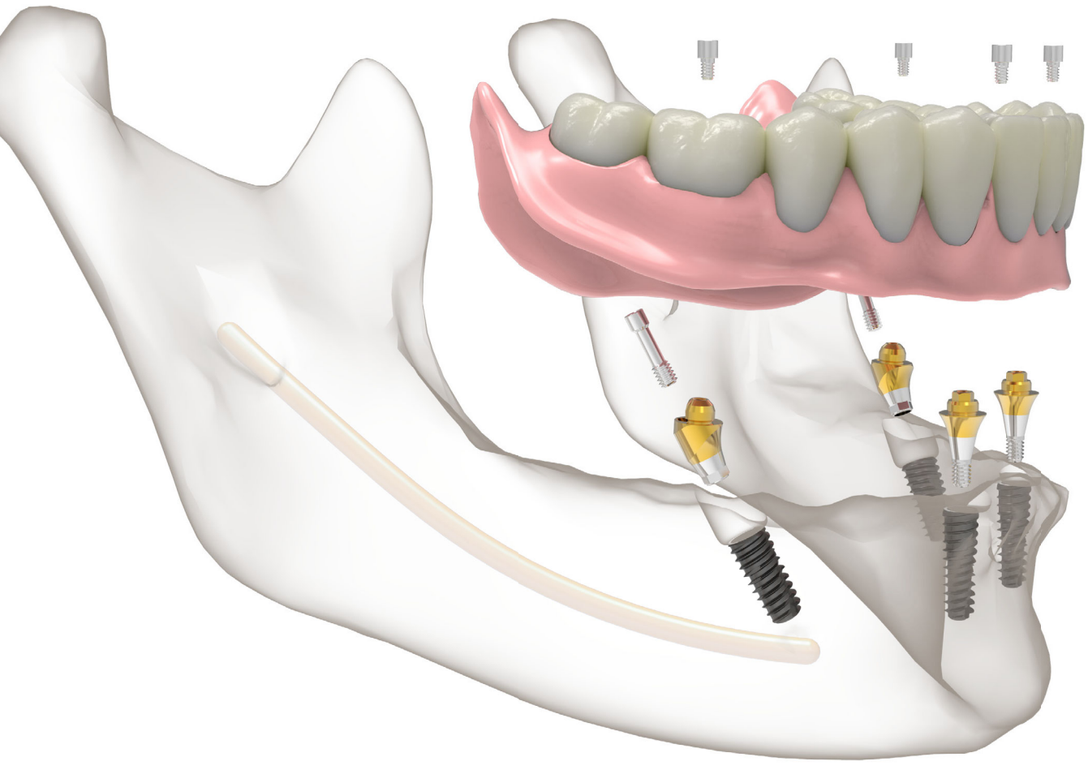

Features

- All–On–4 treatment is possible with MU straight and angled type abutments.
- As for All–On–4 concept, two fixtures are placed at an angle in the posterior and disperse vertical load. The other two fixtures are placed in the anterior area and retains a hybrid denture.
- The scanbody makes the digital work–flow possible.
- It's compatible with Nobel Biocare Multi–Unit System.

MU Straight Abutment Driver

Code No.
DSMUSD

※ For fixing MU Straight Abutment

Impression Coping

	Code No.
MU Transfer Coping	DSMUTICSS
MU Pick-up Coping	DSMUPICSS

Transfer Screw : DSMUTICS
Pick–up Screw : DSMUPICS

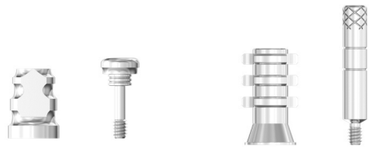

Cylinder

	Code No.
MU CCM Cylinder	DSMUCCS
MU Temporary Cylinder	DSMUTCS

MU Cylinder Screw : DSMUCS

MU Scanbody

Code No.
*DSMUSBSS
*DSMUSBLS

MU Scanbody Screw : DSMUSS

MU Healing Cap

Code No.
DSMUHC

MU Digital Lab Analog

	Code No.
MU Digital Lab Analog	DSMUSDL

MU Ti Base

Code No.
DSMUTBSS
DSMUTBLS

MU Cylinder Screw : DSMUCS

Note

Note

Note